Fundamentals of Generative AI & Large Language Models (LLMs)

---

1. What is Generative AI?

Generative AI refers to a class of artificial intelligence systems capable of producing new, original content — including text, images, audio, video, and code — by learning patterns from vast amounts of training data. Unlike traditional AI that classifies or predicts from fixed categories, generative models learn the underlying data distribution and synthesise novel, contextually relevant outputs.

The core idea is probabilistic modelling: given a prompt or input, the model estimates the most likely and coherent continuation or response. This powers modern systems like ChatGPT, Google Gemini, Anthropic Claude, Stable Diffusion, and DALL·E.

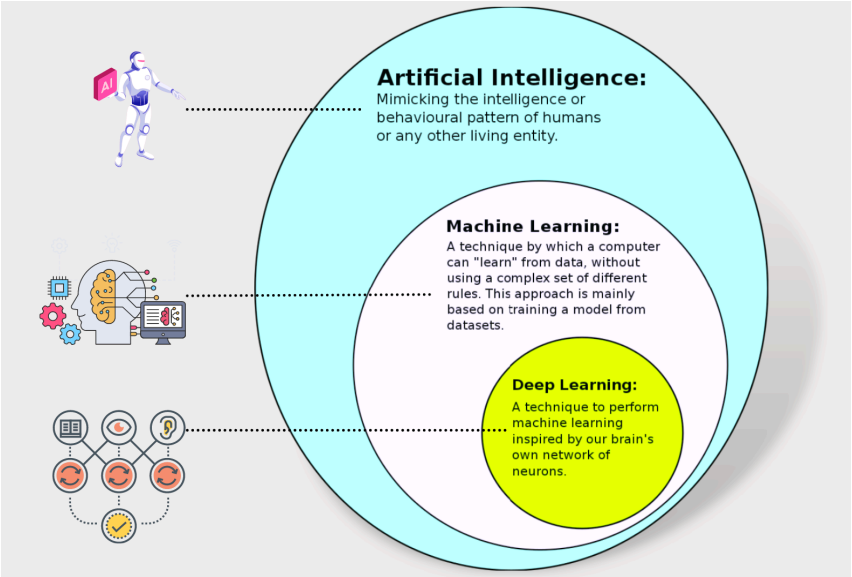

Core Types of Generative Models:

- **Large Language Models (LLMs)** — text generation, reasoning, Q&A
- **Diffusion Models** — photorealistic image synthesis (Stable Diffusion, DALL·E)
- **GANs** (Generative Adversarial Networks) — image and video synthesis
- **VAEs** (Variational Autoencoders) — latent space generation
- **Multimodal Models** — unified text + image + audio understanding

2. Large Language Models (LLMs)

Large Language Models are deep neural networks trained on billions to trillions of tokens of text data. They are built on the **Transformer architecture**, introduced in the landmark 2017 paper *"Attention Is All You Need"* by Vaswani et al. LLMs learn grammar, facts, reasoning patterns, and even common-sense knowledge purely from statistical patterns in text.

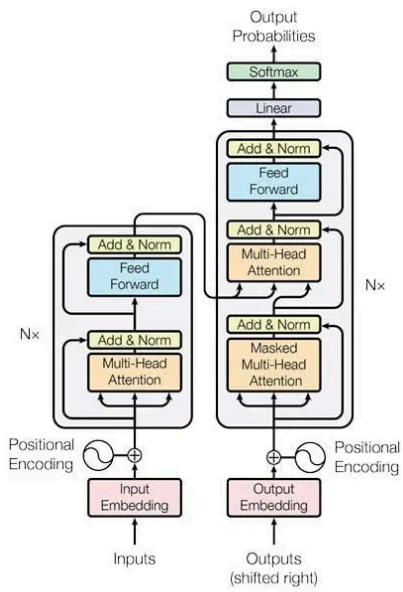

Figure 1: The Transformer - model architecture.

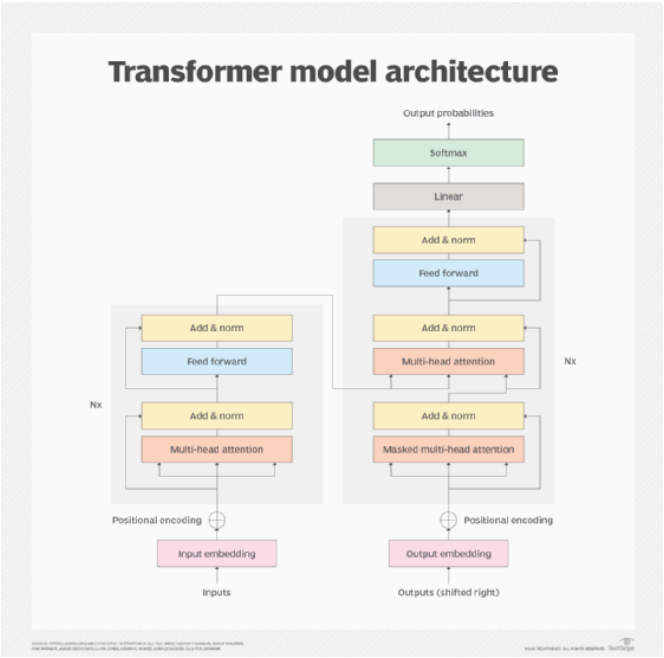

Key LLM Facts:

- GPT-3 has **175 billion parameters** trained on **45 TB** of text
- GPT-4 is estimated to have **~1 trillion parameters**
- Training GPT-4 cost an estimated **$100 million+** in compute
- Modern LLMs can handle **128,000+ token** context windows

Evolution of LLMs — Key Milestones

Year	Model	Milestone
2017	Transformer	"Attention Is All You Need" — the foundation paper
2018	BERT (Google)	Bidirectional pre-training for NLP tasks
2019	GPT-2 (OpenAI)	1.5B parameters; so powerful OpenAI initially withheld it
2020	GPT-3	175B parameters; few-shot learning breakthrough
2022	ChatGPT	Conversational AI reaches 100M users in 60 days
2023	GPT-4	Multimodal; passes bar exams, medical licensing tests
2024	Gemini & Claude 3	Long context, reasoning, tool use, multimodal mastery

Applications of Generative AI

Content Generation — Articles, marketing copy, creative writing, summaries
Code Assistants — GitHub Copilot, Claude, ChatGPT writing and debugging code
Healthcare — Drug discovery, medical imaging analysis, clinical note generation
Education — Personalised tutoring, exam preparation, adaptive learning
Customer Service — 24/7 intelligent chatbots and virtual agents
Research & Analysis — Literature review, data interpretation, hypothesis generation
Creative Arts — Image generation, music composition, video synthesis

Conclusion

Generative AI and LLMs represent a **paradigm shift in computing**. By learning from vast human-generated data and leveraging the Transformer's self-attention mechanism, these systems can reason, create, and communicate at near-human levels across dozens of domains. As research in scale, alignment, and efficiency accelerates, LLMs are becoming the **foundational infrastructure layer** of the next generation of software — transforming every industry from healthcare and education to law and science.